BEHRINGER®

BSO128E01A38 Data Sheet

Dimensional Data:

Length 11.00 IN
OD (Top): 5.06 IN
OD (Bottom): 5.06 IN
Thread: 1 ½" – 16 UNF

Performance Data:

Micron Rating: 1.00
Maximum Temperature: 225 °F
Flow Direction: Out to In
Recommended Change Out: 20 PSID
By-Pass: None

Physical Specifications:

Media: Microglass
Seal Material: Buna
Adhesive: Epoxy
Material: Drawn Steel Can
Configuration: SOE

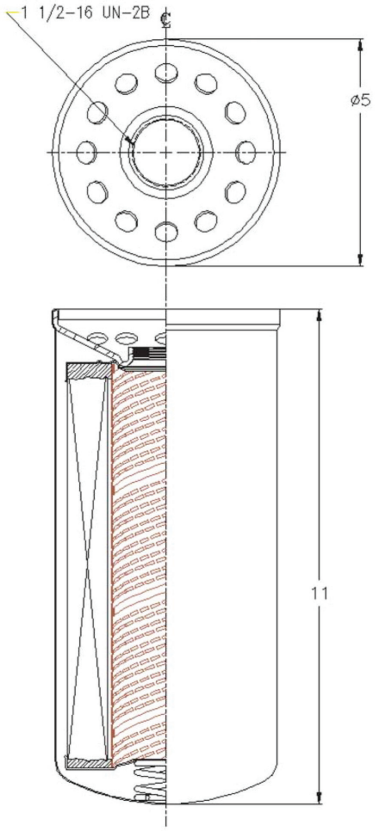

Operating Pressure:	100 PSI
Operating Temp:	-40°F to 225°F
Collapse Rating:	80 PSID
Thread Size:	1-1/2" - 16 UNF
Filtration Rating:	B_3 = 200